EMONI®- LPWAN EndNode

Article number: AG-506

Interoperable Energy Monitoring Device

Made in Germany

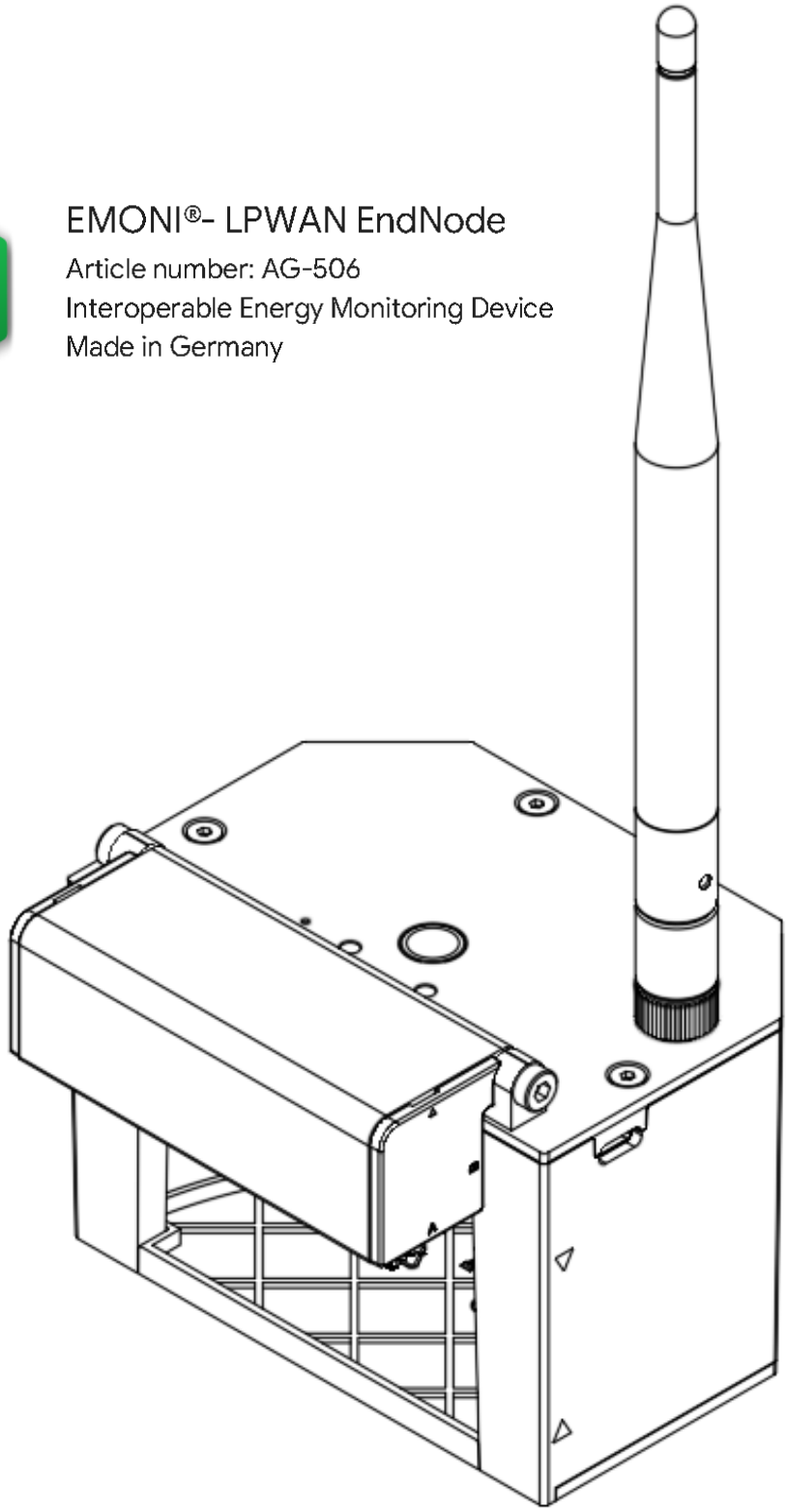

EMONI – User Manual

EMONI is an advanced smart device designed to digitize gas, water and electricity meters without requiring a meter replacement. By continuously capturing and transmitting consumption data, EMONI enables users to optimize energy usage and improve forecasting.

Intended Use

EMONI is a radio equipment device intended for the digital reading of gas, water and electricity meters with a mechanical counter or a digital display in indoor environments.

The device captures images of analog meter dials, performs OCR on the edge device and transmits them securely, validated meter readings and device telemetry via LoRaWAN.



WARNING
Any use outside this intended purpose is considered improper use and voids CE conformity and warranty.

Prohibited Use

1.1 Outdoor operation
1.2 Use in explosive atmospheres (ATEX zones)
1.3 Use in medical, safety-critical, or life-support systems
1.4 Modification of hardware, firmware, antennas, or power circuits
1.5 Operation outside specified electrical, temperature, or humidity limits

Symbol and Signal Words Used

DANGER
Imminently hazardous situation which will result in serious injury or death if not avoided.

WARNING
Potentially hazardous situation which could result in serious injury or property damage.

CAUTION
Potentially hazardous situation which may result in minor injury or equipment damage.

NOTE
Additional information intended to clarify operation or improve usability.

Installation Video
Follow the link or scan the QR code for installation assistance.

Key Features:

OCR-based Meter Reading
EMONI automatically captures meter readings using an onboard camera, processes the image on the device, and perfroms OCR via a custom trained neural network.

On-device OCR & LoRaWAN Transmission
Meter values are transmitted to the LoRaWAN network server via secure OTAA join process and then optionallly to extemal networks via webhooks.

Battery and USB-C Powered
EMONI can run on 4x AA batteries or be powered via USB-C for continuous operation.

Tilt and Fall Detection
The built-in 6D accelerometer detects device movement, tampering, or accidental repositioning.

Safety Instructions

1.1 Read the manual thoroughly before installation and pay particular attention to safety warnings.

⚠ **Fire Hazard from Electrical Current!**

1.2 When used incorrectly with the power supply, there is a risk of fire. Use only the specified, approved power supply.

1.3 Do not open the top of the device near the hinge. No user-serviceable parts are inside. Only the bottom can be opened for battery replacement. If there is an issue, consult a professional.

1.4 Do not use the device if there are visible damages or malfunctioning parts, such as the casing, controls, or connectors. Contact support if in doubt.

1.5 No self-modification or alteration of the device is allowed for safety and regulatory (CE) reasons.

1.6 This device is not a toy!

1.7 Keep away from children. Dispose of packaging carefully to avoid small parts becoming a choking hazard.

1.8 This device can be operated by children over the age of 16 and by individuals with limited physical, sensory, or mental capabilities, but only if supervised and instructed on the safe use.

1.9 Do not use the device outdoors or expose it to moisture, vibrations, excessive heat, cold, or mechanical stresses.

⚠ **Battery Handling**

1.10 Do not recharge used batteries or attempt to reactivate them through heat or other means.

1.11 Do not short-circuit batteries or throw them in fire; there is a risk of explosion.

1.12 Ensure correct polarity when inserting the batteries.

1.13 Use only batteries of the same type and replace worn-out batteries immediately.

1.14 Keep batteries out of the device if it will not be used for a long period. Risk of leakage

Radio Equipment Information (RED 2014/53/EU)

Wi-Fi: 2.4 – 2.4835 GHz, **≤ 20 dBm**
LoRaWAN: 863 – 870 MHz (EU), **≤ 14 dBm**

CAUTION
Antennas are integrated and must not be modified or replaced.

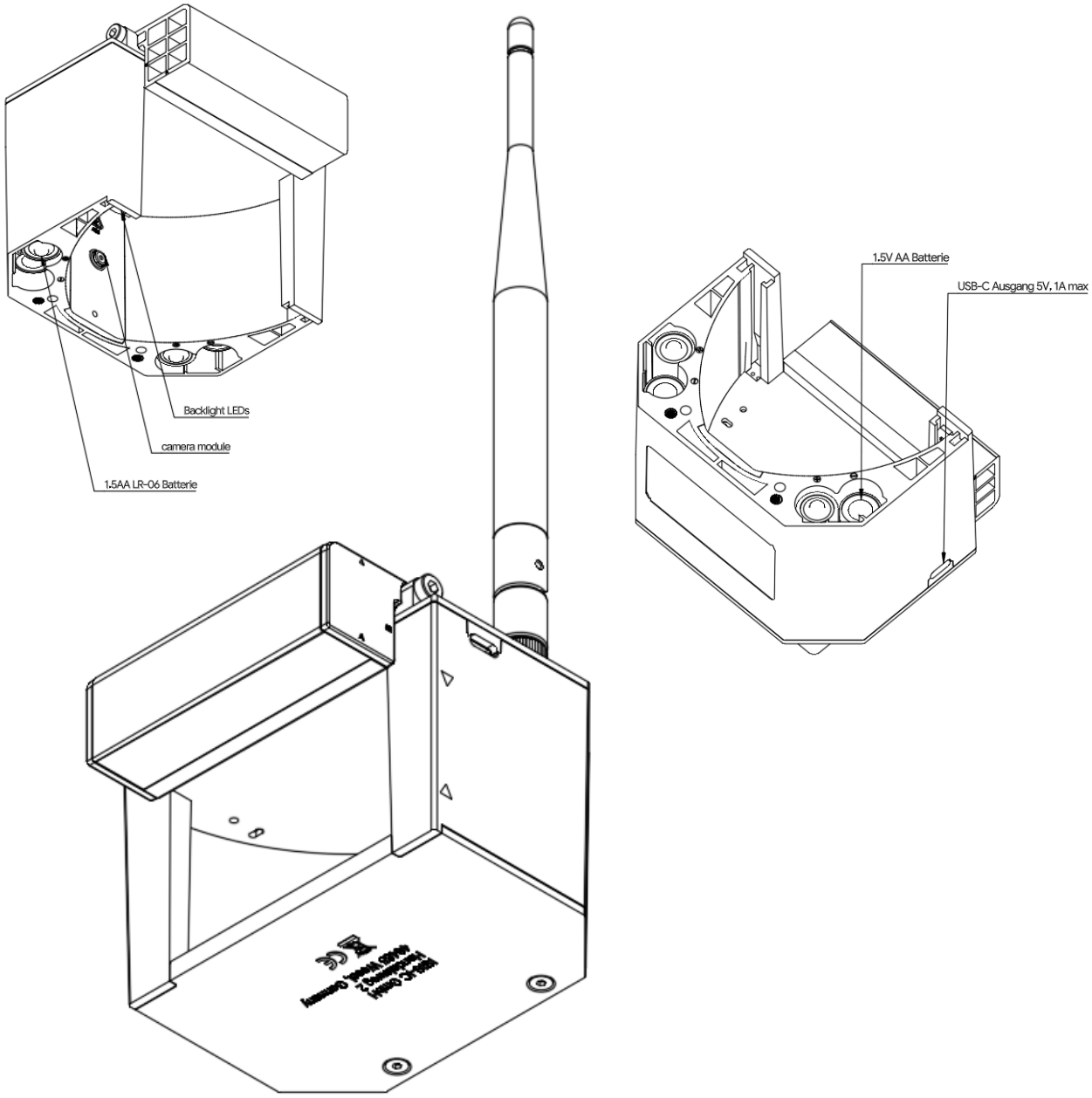

Product Description and Operation

1.1 EMONI LPWAN-Endnode is a camera-based, multi-sensor metering IoT edge device designed to digitize gas, water and electricity meters and transmit consumption data via LoRaWAN to the EMONI cloud platform and the consumer LoRaWAN Network server.

The platform is built to support:

i. **Private customers**
ii. **Business and utility customers**
iii. **Customer-managed infrastructures**

1.2 Operation: EMONI performs OCR centrally on the device and transmits only validated meter values over LoRaWAN.

1.2.1 **Image Capture (device)**
- 1.2.1.1 The device wakes from deep sleep
- 1.2.1.2 Captures an image of the meter digits using the onboard camera

1.2.2 **OCR Processing**
- 1.2.2.1 OCR is performed centrally on the EMONI device
- 1.2.2.2 Image calibration, digit recognition, and validation are handled via the calibration menu.
- 1.2.2.3 A validated OCR result is generated

1.2.3 **LoRaWAN Transmission (Device → LoRaWAN Network)**
- 1.2.3.1 The device packages the OCR value into a LoRaWAN uplink payload
- 1.2.3.2 The OCR value is transmitted to the configured LoRaWAN network
- 1.2.3.3 The LoRaWAN payload contains values only, not images

1.2.4 **Deep Sleep**
- 1.2.4.1 The device returns to deep sleep until the next scheduled cycle

NOTE
Images are never transmitted via LoRaWAN.

For additional help with installation, setup, and restoring factory settings, use the support videos available on the app or our website: https://emoni.cloud/

Functional Capabilities

2.1 Meter Reading
- 2.1.1 Optical character recognition (OCR) of analog meter dials
- 2.1.2 Improved image calibration and robustness
- 2.1.3 High tolerance to lighting and mounting variations

2.2 Sensor-based event detection

EMONI integrates a 6D accelerometer enabling:
- 2.2.1 Tilt detection
- 2.2.2 Fall detection
- 2.2.3 Unexpected movement detection

These events can be used for:

2.2.4 Tamper detection
2.2.5 Installation integrity monitoring
2.2.6 Operational alerts

Connectivity & Deployment Models

EMONI supports three operational deployment models.

3.1 EMONI Cloud Integration (standard)

3.1.1 Wi-Fi based IP connectivity
3.1.2 Automatic firmware updates
3.1.3 Device management via App and Web UI
3.1.4 Centralized diagnostics and monitoring

Implications:

3.1.5 LoRaWAN is optional
3.1.6 OCR values may be used internally within the cloud only
3.1.7 No LoRaWAN uplink is required

Typical use cases:
Private customers, small installations, managed service deployments.

3.2 Customer-Managed LoRaWAN Integration (LPWAN End-Node)

3.2.1 Device communicates via LoRaWAN
3.2.2 No dependency on EMONI Cloud for data visualization
3.2.3 Customer controls:
3.2.3.1 Network server
3.2.3.2 Application server
3.2.3.3 Data storage and processing

Typical user cases:
Utilities, municipalities, grid provider, industrial environments.

Device Provisioning/One-time Calibration

4.1 Provisioning

4.1.1 Initial provisioning establishes device calibration
4.1.2 Calibration settings are preserved in the device memory.

4.2 Requirements

4.2.1 4x AA Batteries / Power socket
4.2.2 A smartphone or laptop with Wi-Fi
4.2.3 Your LoRaWAN credentials:
4.2.3.1 DevEUI
4.2.3.2 JoinEUI (AppEUI)
4.2.3.3 AppKey

4.3 Unboxing and Initial Inspection

Verify the following before continuing:

4.3.1 **Check the Device Label**

On the back or Bottom of EMONI, you will see:

4.3.1.1 DevEUI and/or LoRaWAN OTAA QR code

4.3.2 **Insert Batteries**

4.3.2.1 Open the battery compartment

4.3.2.2 Insert 4x AA batteries, observing polarity.

4.3.2.3 Close the compartment securely

Once powered, the device will perform an internal startup check.

4.4 Installation on your meter

4.4.1 Positioning on the device

Mount EMONI above or in front of your mechanical meter's digit display using the included bracket.

4.4.2 Please make sure:

4.4.2.1.1 Camera must face the digits directly

4.4.2.1.2 No reflections from the glass covers

4.4.2.1.3 No shadows covering the digits

4.4.2.1.4 Device must be stable

Power Management

5.1 Power Sources

5.1.1 USB-C external power supply

5.1.2 Battery operation (4x 1.5VAA batteries)

USB power is prioritised automatically. Battery consumption is reduced when USB power is present.

Button Functions

7.1 User Button

7.1.1 **Short Press:** Wakes device from deep sleep and triggers a measurement.

7.1.2 **Long Press (3 seconds):** Performs a factory reset, erasing the calibration data and all Wi-Fi settings. A new calibration always starts with this reset.

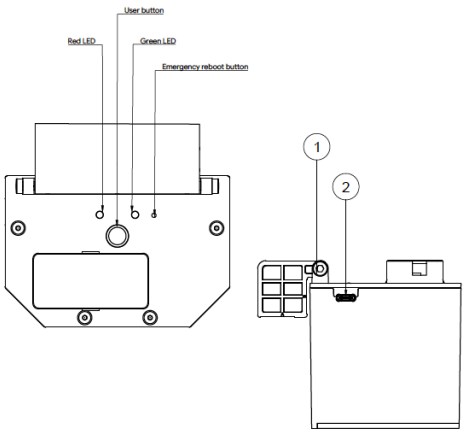

7.2 Emergency Reboot Button

EMONI includes a hardware-level emergency reboot button:

7.2.1 Located under the top lid

7.2.2 Protected against accidental activation

7.2.3 **Intended Use**

7.2.3.1 Firmware boot loops

7.2.3.2 Unresponsive device states

7.2.3.3 Field recovery without device replacement

This button **does not** reset ownership or security settings.

LoRaWAN Setup, Payload & Codec Specification

8.1 Enabling LoRaWAN Transmission

- 8.1.1 **Install LoRaWAN Credentials:**
  - 8.1.1.1 Refer to the LoRaWAN sticker
  - 8.1.1.2 Enter your LoRaWAN network credentials to link EMONI to your network.
- 8.1.2 **Device Behavior:**
  - 8.1.2.1 The device will now transmit validated meter readings via LoRaWAN.
  - 8.1.2.2 It will send the OCR value (meter reading) to your network, while images are never transmitted over LoRaWAN.

8.2 Communication Characteristics

- 8.2.1 Transport: LoRaWAN (regional parameters apply)
- 8.2.2 Uplink types:
  - 8.2.2.1 Scheduled metering uplinks
  - 8.2.2.2 Event-driven uplinks
- 8.2.3 Downlinks:
  - 8.2.3.1 Configuration updates
  - 8.2.3.2 Operational commands (restricted)

Payloads are compact, binary-encoded, and optimized for low power usage.

8.3 Uplink Payload Types

- 8.3.1 Meter Reading Payload

Field	Type	Description
Meter value	bit-packed	Absolute meter reading
Event code	8 bit	Errors and events
Battery level	13 bit	Battery level in mV
Axis Data	int16 × 3	X, Y, Z acceleration
Comma	5 bit	Digits before comma
Qmax	16 bit	Qmax × 10

8.4 Downlink Commands

Payloads are compact, binary-encoded, and optimized for low power usage.
Supported commands:

- 8.4.1 Remote re-baseline: {"recalibrate":1} re-baselines the stored reading; the calibration is kept
- 8.4.2 Upload interval adjustment: 1 min to 72 h (binary 0x01 + minutes, or {"upload_interval_sec":N})
- 8.4.3 Confirmed-uplink period: {"confirm_min":N}; 0 = every uplink, 65535 = set by the network

Firmware updates over LoRaWAN (FUOTA) are supported as delta updates on FPort 150, on a self-hosted The Things Stack or ChirpStack network server (not on public TTN). Images are never transported over LoRaWAN.

Duration, requirements on the network server and the verification of FUOTA: Technical Reference Manual, section 5.

8.5 Codec Responsibility

- 8.5.1 EMONI provides a standard backend codec.
- 8.5.2 Customers are responsible for integrating the decoding codecs into their LNS.

NOTE
The LoRaWAN decoder codec and the subsequent documentation for the downlinks, is available at https://emoni.cloud/downloads.

Maintenance & Service

Clean only with a dry, soft cloth. Do not use liquids or solvents. Do not spray cleaning agents directly onto the device. Clean the device using a soft, dry cloth.

Environmental Protection

Dispose of electronic equipment via authorised WEEE collection points. Batteries must be disposed of separately. The device complies with RoHS Directive 2011/65/EU.

Applied Harmonised Standards

11.1 Article 3.1 a)
- ETSI EN IEC 62368-1:2024+A11:2024
- ETSI EN IEC 62311:2020

11.2 Article 3.1 b)
- ETSI EN 301 489-1 V2.2.3 (2019-11)
- ETSI EN 301 489-3 V2.3.2 (2023-01)
- ETSI EN 55032:2015+ A1:2020
- ETSI EN 55032:2017+ A11:2020
- ETSI EN IEC 61000-3-2:2019+A2:2024

ETSI EN IEC 61000-3-3:2013+A2:2021

11.3 Article 3.2

ETSI EN 300 328 V2.2.2 (2019-07)
ETSI EN 301 220-1 V3.1.1 (2017-02)
ETSI EN 301 220-1 V3.3.1 (2025-03)

NOTE
The full EU Declaration of Conformity is available at https://emoni.cloud/downloads.

Compliance & Warranty

12.1 Warranty Period: 2 years
12.2 CE compliant under RED 2014/53/EU
12.3 Indoor use only (IP20)
12.4 Operation outside specifications voids compliance
12.5 Software updates are required to maintain support eligibility
12.6 For support or replacements, please contact:
Email: info@emoni.cloud
Website: https://emoni.cloud

Decommissioning & Disposal

13.1 Dispose of electronic devices according to WEEE regulations
13.2 Batteries must be disposed of separately

Risk Assessment

14.1 Electrical shock or fire risk mitigated through low-voltage design and approved power supply.
14.2 Battery hazards mitigated through handling instructions and disposal guidance.
14.3 Installation errors mitigated through mounting instructions.

Residual risks remain if the device is used outside its intended purpose.

Troubleshooting

15.1 Device does not start:
15.1.1 Check power supply or batteries
15.1.2 Ensure correct battery polarity

15.2 No LoRaWAN connection:
15.2.1 Ensure Antenna is placed close to the Gateway
15.2.2 Use extendable external antennas if neccassary.

Security

Signed firmware (Secure Boot).
The device starts only firmware that is signed by ISIS IC GmbH. Modified or foreign firmware is rejected.

Encrypted memory (Flash Encryption).
Firmware and stored data, including the calibration and the network settings, are kept encrypted in the device memory and cannot be read out from the electronics.

Access to the calibration menu.
The device opens its Wi-Fi only for calibration and closes it again after 10 minutes. The menu needs a login: user name admin, password = the last 8 characters of the device AppKey, in lowercase letters (capitals are accepted too). The AppKey is sent to the customer separately by email. After 5 wrong passwords in a row, every login is refused for 60 seconds.

LoRaWAN.
The device joins the network by OTAA with its own 128-bit AppKey. LoRaWAN encrypts every uplink and downlink (AES-128). Images are never sent over LoRaWAN.

Firmware updates. Updates are delivered over LoRaWAN (FUOTA, on a self-hosted or private network server). Every update file is checked before it is installed; if an update fails, the device returns to the previous firmware.

Handing over or disposing of the device.
Perform a factory reset first (hold the button for 3 seconds). This deletes the calibration and the stored Wi-Fi settings.

Data Processing and Privacy

EMONI processes meter images for recognition only, meter values, and device status information. Images are not transmitted via LoRaWAN (only via Wi-Fi).

Further information is available at https://emoni.cloud/privacy.

Manufacturer Information

ISIS IC GmbH
Handelsweg 2
46485 Wesel
Germany

Email: info@emoni.cloud/
Web: https://emoni.cloud/

LoRaWAN Technical Parameters

MAC Version	1.0.2
Regional Parameters	EU868, RP001 1.0.2 revision B
Channels	868.1 / 868.3 / 868.5 MHz
RX2	869.525 MHz, DR set by network
RX1 Delay / Offset	Set by the network
FUOTA	Class A, delta updates supported
Confirmed Uplinks	Yes (adjustable)
Join data rate	DR0 (SF12), ADR on
Device Class	Class A
Frequency Band	EU-868 MHz
Product Category	LoRaWAN Endnode
Use Cases	Meter Smartification, Smart Building
Manufacturer	**ISIS IC GmbH**
Power Supply	4 × AA lithium (Energizer L91)
Certifications	CE / RED

Operation Conditions

Operating Temperature	+5 °C to +45 °C
Storage Temperature	−20 °C to +70 °C (max 70% RH)
Humidity (non-condensing)	0–95%

Wireless

WiFi Standard	IEEE 802.11 b/g/n
WiFi Mode	Client
Frequency	2400–2483.5 MHz
Output Power	13 ± 2 dBm (@HT20, MCS7)
Category	Recipient Category 2
Security	WPA2

Electrical Specification

Connection Type	Battery only
Battery Option	4× 1.5V AA
Power Consumption (Inactive)	≈ 0.20 mW @ 5V (0.53 mW with motion wake)
Power Consumption (Active)	≈ 0.26 W @ 5V (mean of a 5.4 s wake)
Data/Measurement Interval	1 min to 72 hours (default 3 h)

Camera Sensor

Resolution	480 × 320
Lens Size	1/5 inch

Mechanical Specification	
Weight	196 g (without batteries)
Dimensions (H × L × W)	80 × 72 × 107 mm
Case	ABS plastic, robust housing (IK 7), requires tools to open
Assembly Method	3M adhesive tape with hinge
Protection Class	IP20 (TBC)

Battery-lifetime Estimates	
Upload Interval	**Battery Life (typical): motion wake off / on**
@1min.	1 month / 1 month
@30min.	2.1 years / 1.6 years
@60min.	3.5 years / 2.3 years
@3h (default)	**6.2 years / 3.2 years**
@6h	> 7.5 years / 3.5 years
@12h	> 7.5 years / 3.8 years

Made in Germany

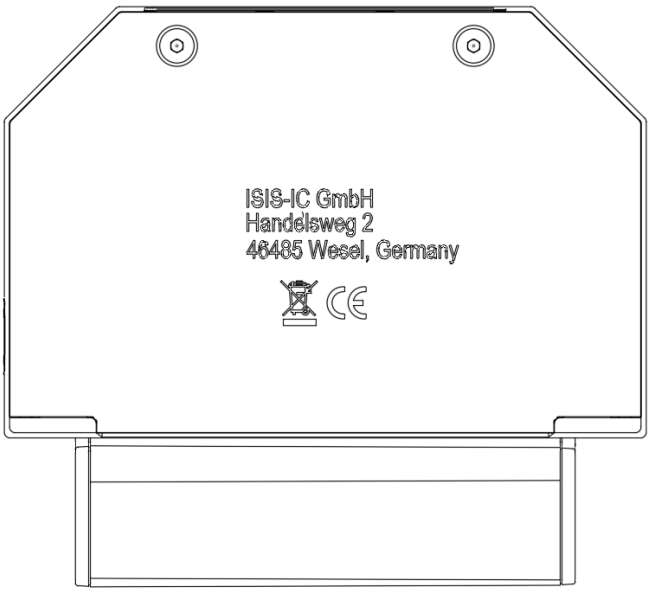

Quick Start Guide

0.0. Device Controls & User Feedback

Control / Indicator	Function
Button – Short Press	Wake from deep sleep / Trigger a measurement cycle
Button – Long Press (3 s)	Factory reset including calibration data
Green – blinking slowly	Device starting
Green – fading	Joining the LoRaWAN network
Green – on	Joined, device active
Red – on	Taking a picture
Red – short flash	Reading sent
Red + green – fading together	Not calibrated, calibration Wi-Fi open
Red + green – blinking together	Firmware update in progress
Red + green – blinking fast	Factory reset, device restarts
Red – blinking fast (5 s)	Battery too low for calibration Wi-Fi

1.0. Fast Calibration

1. Connect to EMONI Wi-Fi	SSID: EMONI-XXXX • Password: ENNY!LORA
2. Open Web Interface	http://10.10.10.1/ (all devices) Log in: admin / last 8 characters of the AppKey, lowercase
3. Mount the Device	Fix using adhesive/ties.
4. Set ROI	Frame the counter digits tightly; see the EMONI Calibration Guide
5. Recalibration	Required after a factory reset (long press).

2.0. LoRaWAN Setup

Setup instructions	Available in the Web UI under the LoRaWAN menu. Device keys are sent to the customer by email.
Recommended device	Laptop/PC for copying codecs/downlinks easily.
Downlinks	Upload interval, confirm period and re-baseline.

